DIAMOND GEAR

265WG256

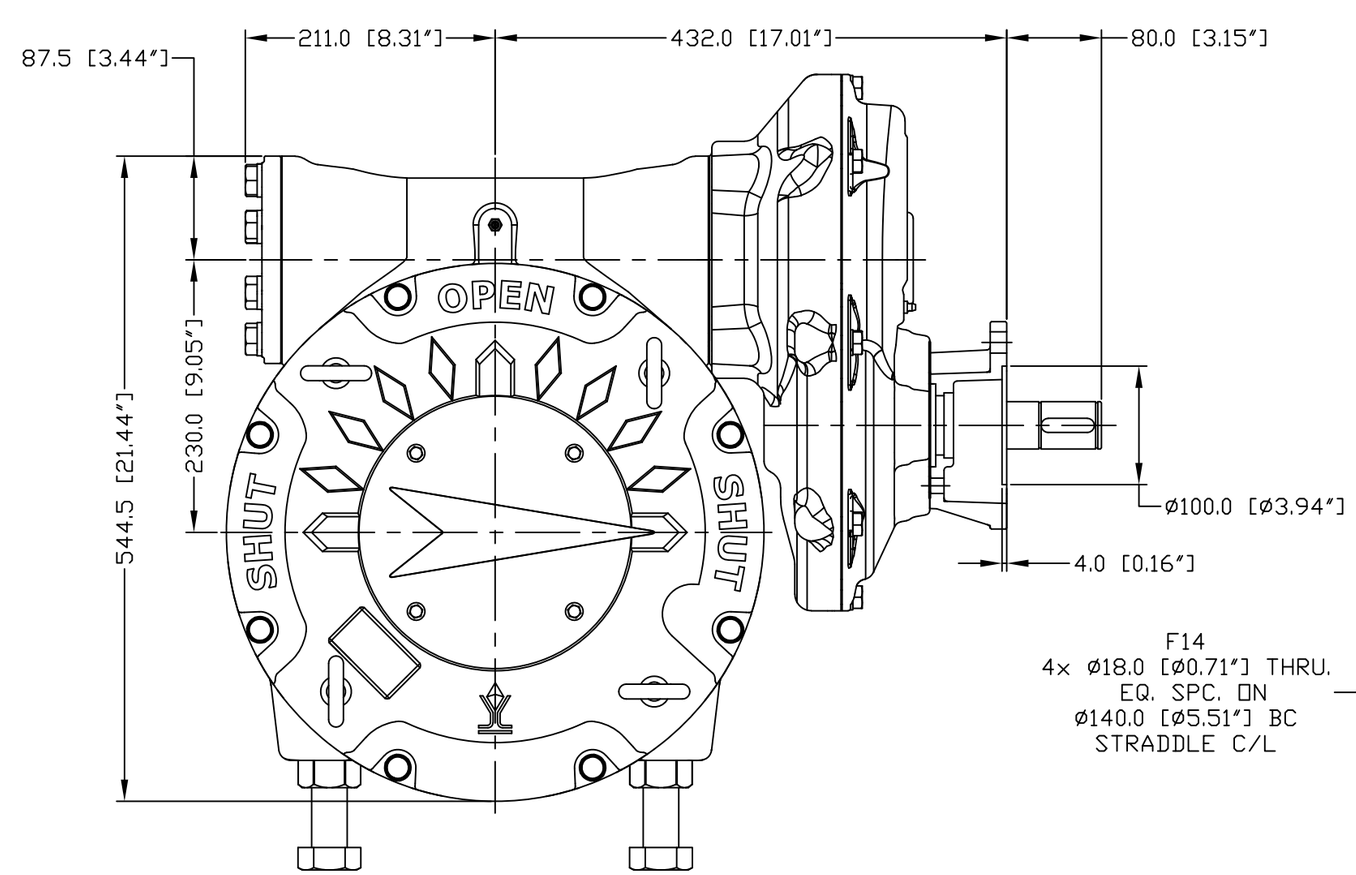

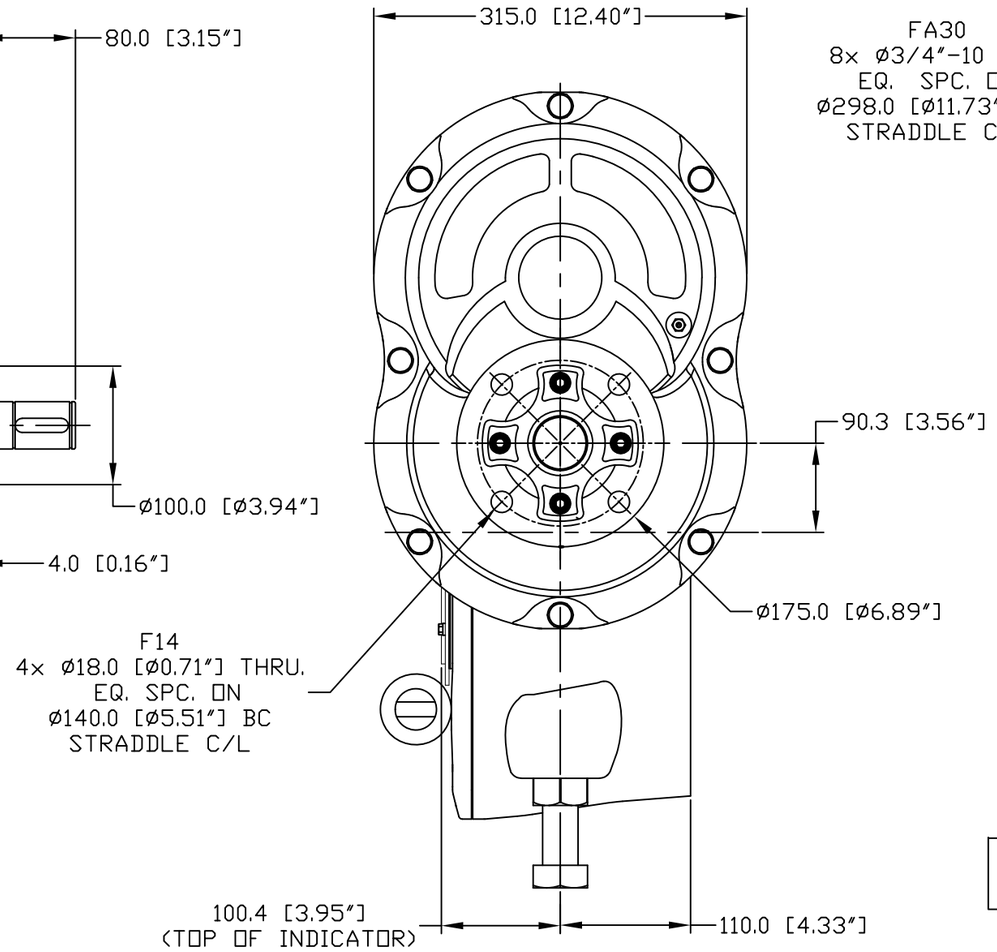

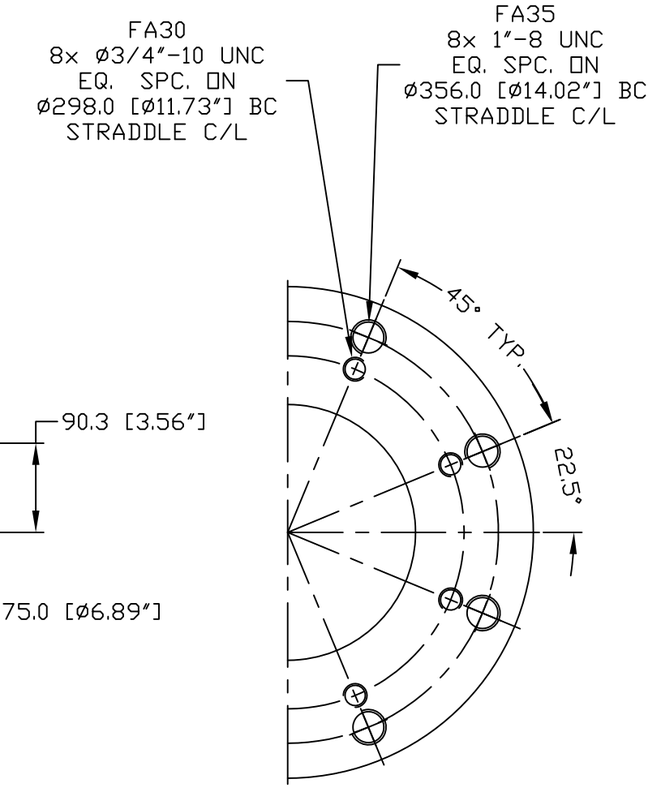

Standard Mounting Flange For Valve	MSS FA30 & FA35

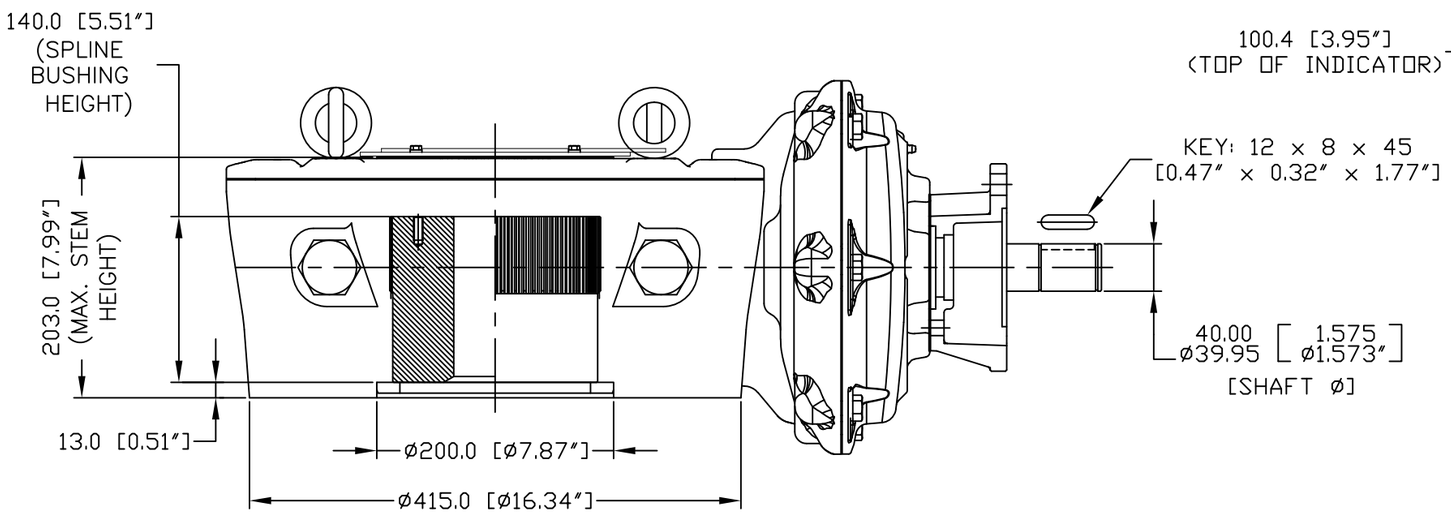

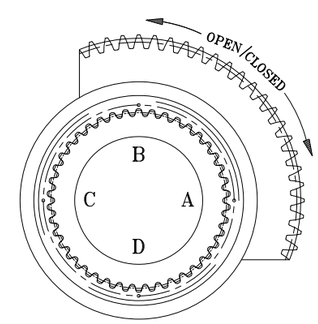

CLOSED POSITION

HW DIA.	RIM PULL AT MAX. I/P TORQUE (Lbs.)
32"	214

REV.B

C921216A | 12/17/19

UNITS: MM [Inches]

MAX. OUTPUT TORQUE [IN.LB]	MAX. INPUT TORQUE [IN.LB]	RATIO	MECHANICAL ADVANTAGE	OUTPUT ANGULAR STROKE	TURN PER 90°	WEIGHT [LB]	MAX. ROUND BORE [IN.]	MAX. SQUARE BORE [IN.]	STANDARD MOUNTING STRADDLE C/L
265,091	3,364	256:1	78.8	±20°	64	342	ø5-7/16" Key: 1-1/4"x7/8"	4-7/16"	FA30 & FA35

DIAMOND GEAR
HOUSTON, TEXAS, USA
PHONE: 713-590-0270