DIAMOND GEAR

1565WG1550

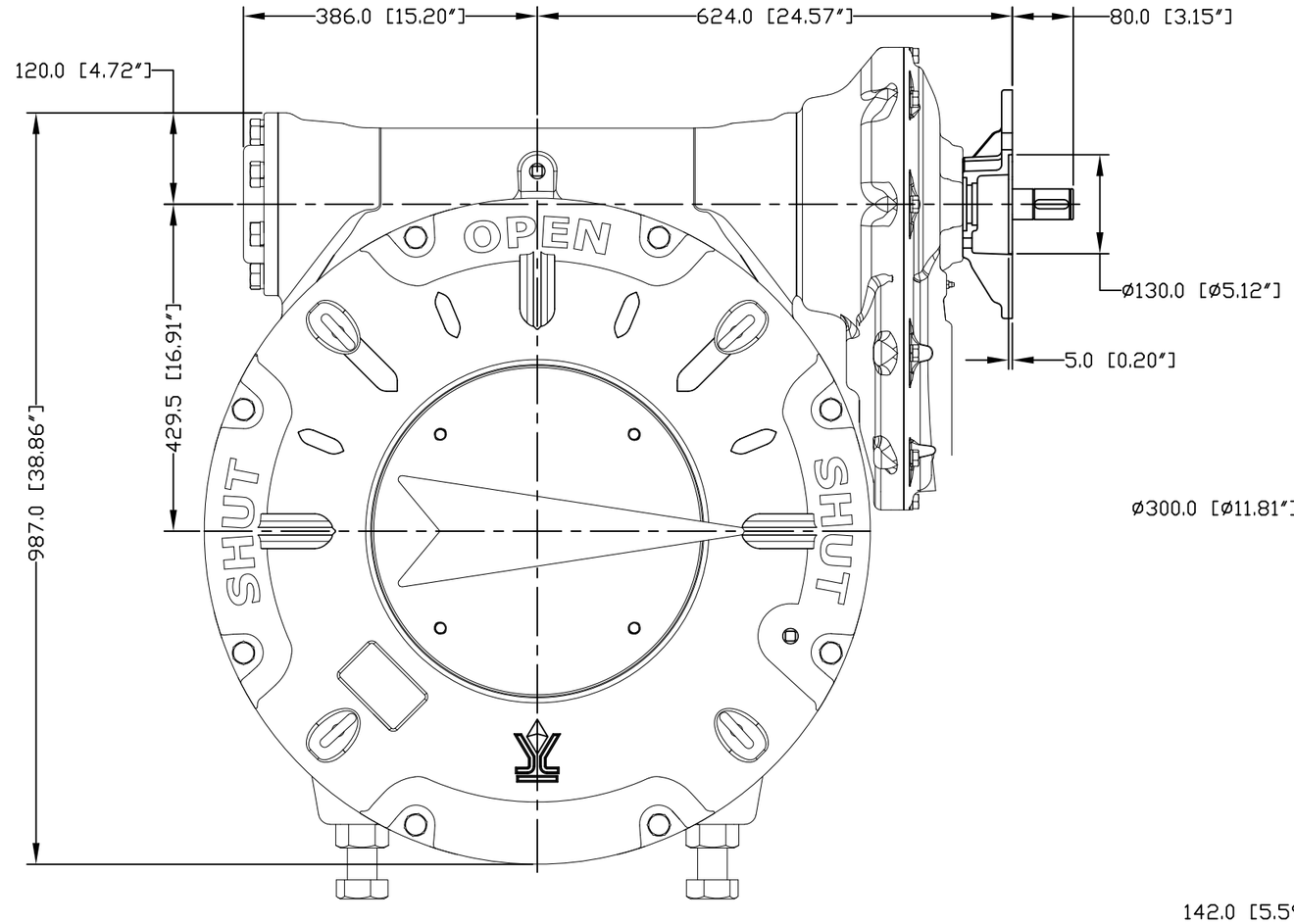

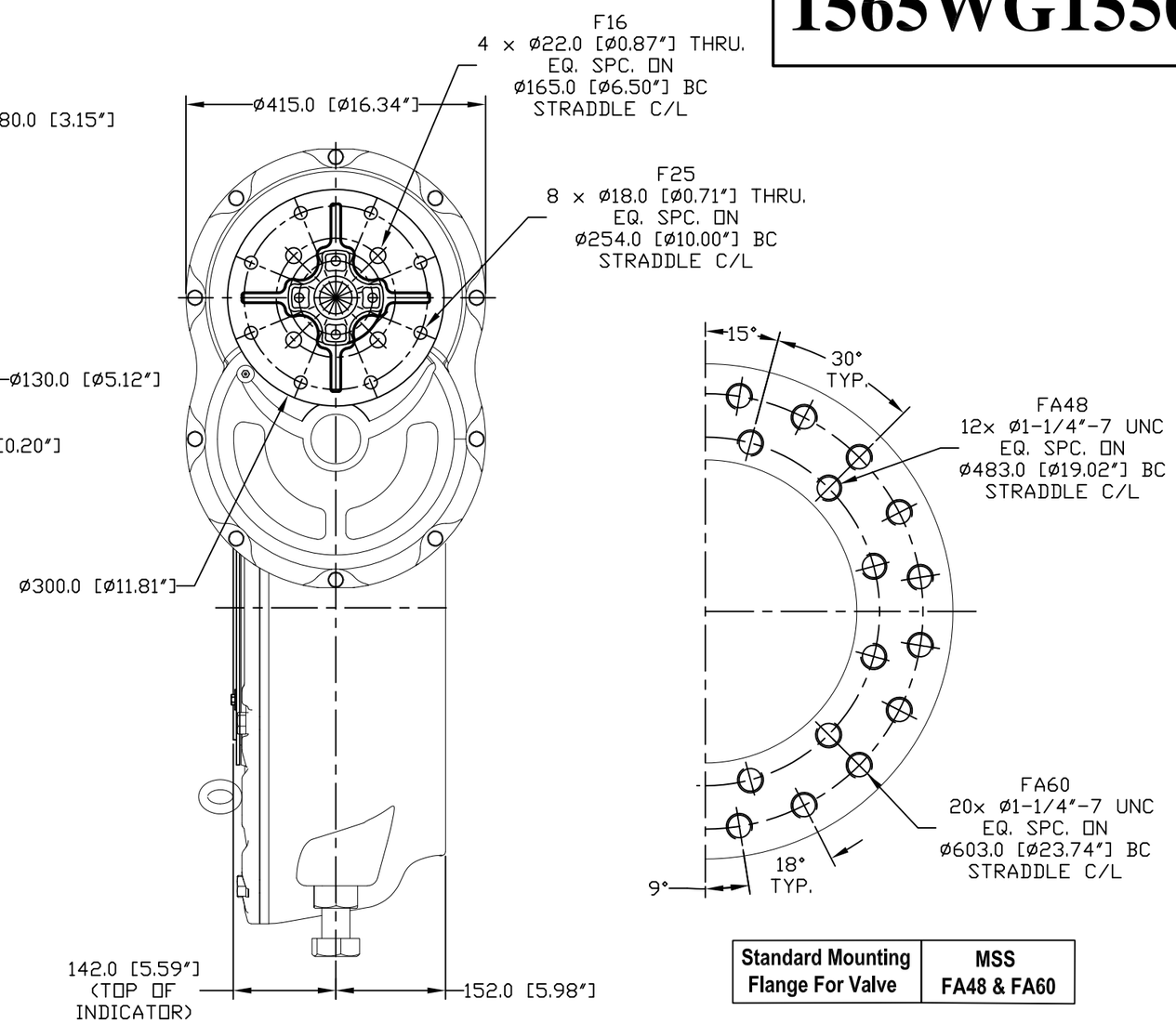

Standard Mounting Flange For Valve	MSS FA48 & FA60

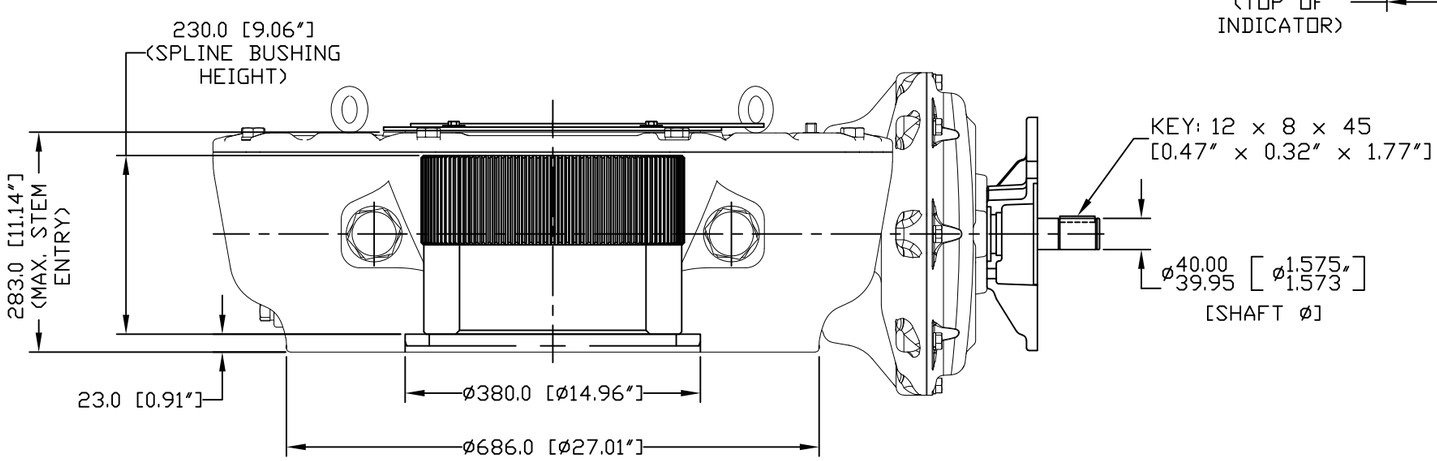

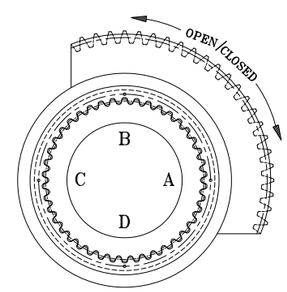

CLOSED POSITION

HW DIA.	RIM PULL AT MAX. I/P TORQUE (Lbs.)
40"	189

REV.A

C921255A 12/17/19

UNITS: MM [Inches]

MAX. OUTPUT TORQUE [IN.LB]	MAX. INPUT TORQUE [IN.LB]	RATIO	MECHANICAL ADVANTAGE	OUTPUT ANGULAR STROKE	TURN PER 90°	WEIGHT [LB]	MAX. ROUND BORE [IN.]	MAX. SQUARE BORE [IN.]	STANDARD MOUNTING STRADDLE C/L
1,565,911	3,727	1550:1	420.1	±20°	387.5	1,444	ø10.0" Key: 2-1/2" x 1-3/4"	8-1/4"	FA48 & FA60

DIAMOND GEAR
HOUSTON, TEXAS, USA
PHONE: 713-590-0270